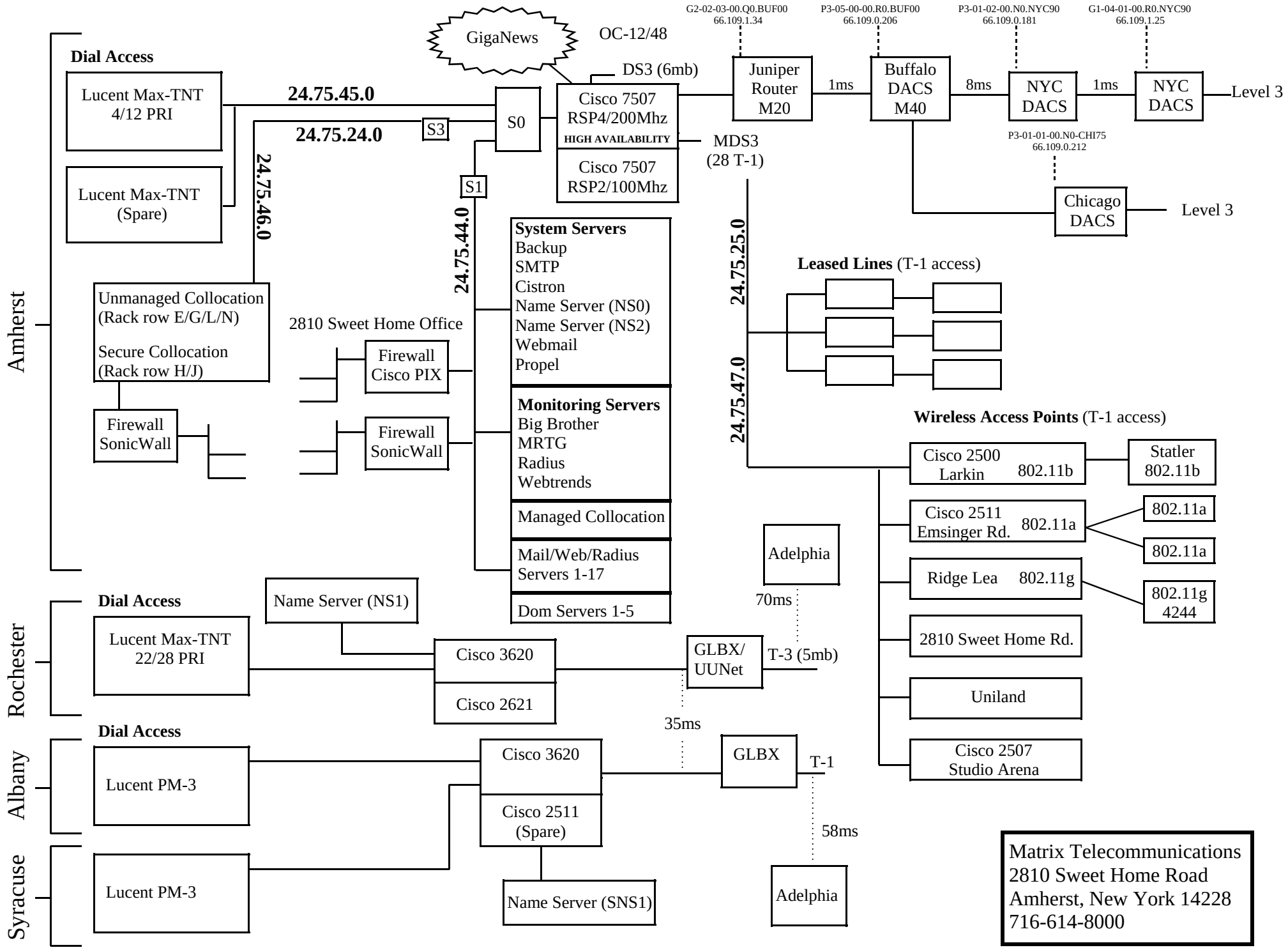
Amherst
Dial Access
Lucent Max-TNT 4/12 PRI
Lucent Max-TNT (Spare)
24.75.45.0
24.75.24.0
24.75.46.0
S3
S0
S1
GigaNews
OC-12/48
DS3 (6mb)
Cisco 7507 RSP4/200Mhz
HIGH AVAILABILITY
Cisco 7507 RSP2/100Mhz
MDS3 (28 T-1)
G2-02-03-00.Q0.BUF00 66.109.1.34
P3-05-00-00.R0.BUF00 66.109.0.206
P3-01-02-00.N0.NYC90 66.109.0.181
G1-04-01-00.R0.NYC90 66.109.1.25
Juniper Router M20
1ms
Buffalo DACS M40
8ms
NYC DACS
1ms
NYC DACS
Level 3
P3-01-01-00.N0-CHI75 66.109.0.212
Chicago DACS
Level 3
24.75.44.0
System Servers
Backup
SMTP
Cistron
Name Server (NS0)
Name Server (NS2)
Webmail
Propel
Monitoring Servers
Big Brother
MRTG
Radius
Webtrends
Managed Collocation
Mail/Web/Radius Servers 1-17
Dom Servers 1-5
24.75.25.0
24.75.47.0
Leased Lines (T-1 access)
Unmanaged Collocation (Rack row E/G/L/N)
Secure Collocation (Rack row H/J)
Firewall SonicWall
2810 Sweet Home Office
Firewall Cisco PIX
Firewall SonicWall
Wireless Access Points (T-1 access)
Cisco 2500 Larkin 802.11b
Statler 802.11b
Cisco 2511 Emsinger Rd. 802.11a
802.11a
802.11a
Ridge Lea 802.11g
802.11g 4244
2810 Sweet Home Rd.
Uniland
Cisco 2507 Studio Arena
Adelphia
70ms
Rochester
Dial Access
Lucent Max-TNT 22/28 PRI
Name Server (NS1)
Cisco 3620
Cisco 2621
GLBX/ UUNet
T-3 (5mb)
35ms
Albany
Dial Access
Lucent PM-3
Cisco 3620
Cisco 2511 (Spare)
GLBX
T-1
58ms
Syracuse
Lucent PM-3
Name Server (SNS1)
Adelphia
Matrix Telecommunications
2810 Sweet Home Road
Amherst, New York 14228
716-614-8000